RoHS compliant

SPECIFICATION
MATERIAL AND FINISH:
1. INSULATOR: THERMOPLASTIC, WHITE
2. CONTACTS: PHOSPHOR BRONZE
   FINISH: SN 100u" OVER NI 50u"

Chant Sincere Co., Ltd. 17JAN2025 Research & Development Dept.

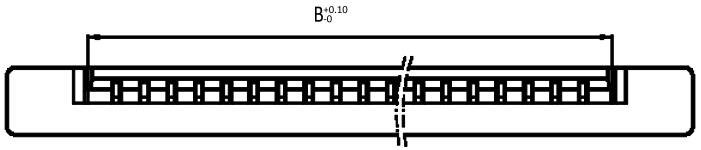

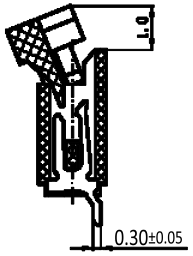

A-A

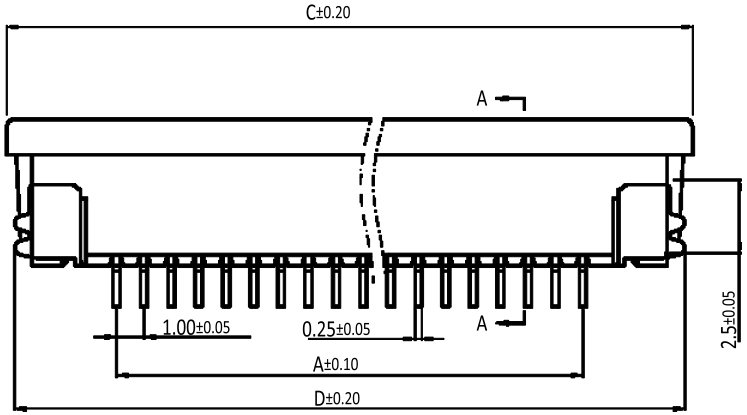

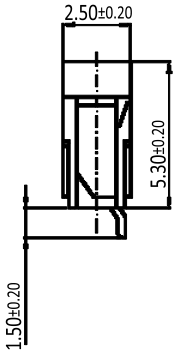

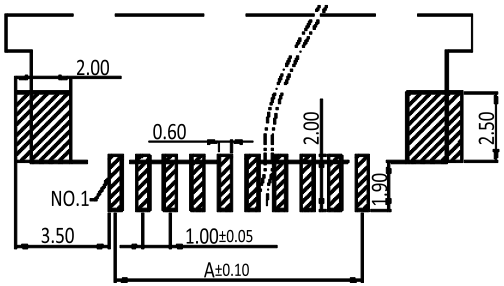

PCB LEVOUT
TOLERANCES: ±0.05mm

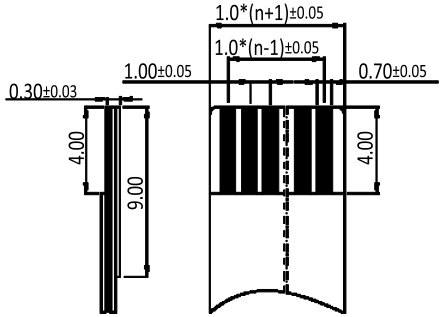

PIN NO.	DIM. A	DIM. B	DIM. C	DIM. D
4	3.00	5.30	11.10	10.10
5	4.00	6.30	12.10	11.10
6	5.00	7.30	13.10	12.10
7	6.00	8.30	14.10	13.10
8	7.00	9.30	15.10	14.10
9	8.00	10.30	16.10	15.10
10	9.00	11.30	17.10	16.10
11	10.00	12.30	18.10	17.10
12	11.00	13.30	19.10	18.10
13	12.00	14.30	20.10	19.10
14	13.00	15.30	21.10	20.10
15	14.00	16.30	22.10	21.10
16	15.00	17.30	23.10	22.10
17	16.00	18.30	24.10	23.10
18	17.00	19.30	25.10	24.10
19	18.00	20.30	26.10	25.10
20	19.00	21.30	27.10	26.10
21	20.00	22.30	28.10	27.10
22	21.00	23.30	29.10	28.10
23	22.00	24.30	30.10	29.10
24	23.00	25.30	31.10	30.10
25	24.00	26.30	32.10	31.10
26	25.00	27.30	33.10	32.10
27	26.00	28.30	34.10	33.10
28	27.00	29.30	35.10	34.10
29	28.00	30.30	36.10	35.10
30	29.00	31.30	37.10	36.10
31	30.00	32.30	38.10	37.10
32	31.00	33.30	39.10	38.10
33	32.00	34.30	40.10	39.10
34	33.00	35.30	41.10	40.10
35	34.00	36.30	42.10	41.10

XXX=PIN NO.

ITEM	NEW P/N	OLD P/N	PACKING	NOTE
1	5830201XXX0	831DE06PTL0011	TAPE REEL	

UNLESS OTHERWISE SPECIFIED TOLERANCE
.XX ±0.15

SIP
ST Cmk Cpk

CHANT SINCERE CO.,LTD

SCALE: AS SHOWN
UNIT: mm

DRAWN: KEVIN_ZHENG 30 Dec 2024
CHECKED: PEARL_HUNG 30 Dec 2024
APPROVED: PEARL_HUNG 30 Dec 2024

TITLE: FPC CONNECTOR ZIF
PITCH: 1.0 mm H=2.5mm

PART NO. 58302010060

SIZE A4 SHEET 1/1 REV. B CODE: X3 CUSTOMER:

ZONE	REVISION	DESCRIPTION	DATE
	B	ECN-2412037(KIRA)NEW P/N	11DEC2024
	A	ECN-0812016(CAROL)	28NOV2008