RoHS compliant

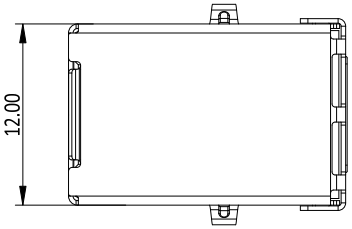

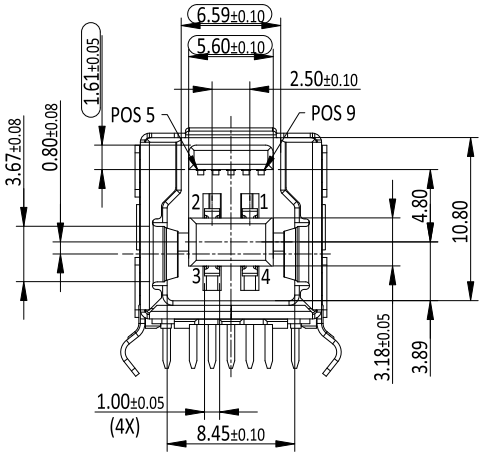

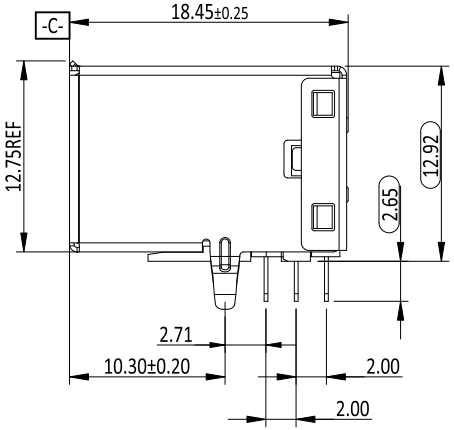

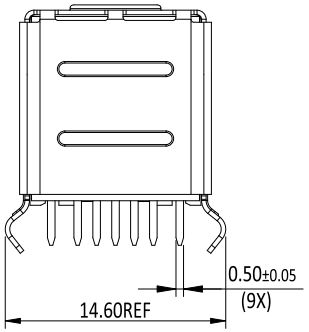

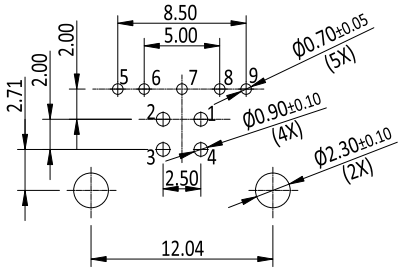

REFERENCE PCB LAYOUT

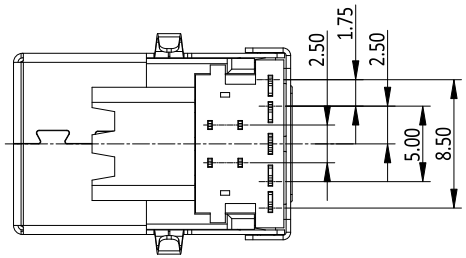

SPECIFICATION

MATERIAL AND FINISH:
1. HOUSING: PBT+30%GF, 94V-0, BLUE
2. CONTACT: COPPER ALLOY(T=0.25mm)
   PLATING: AU PLATED ON CONTACT AREA
   SN PLATED ON SOLDER AREA
   NI UNDERPLATING OVER ALL
3. SHELL: BRASS, NI PLATED

ELECTRICAL CHARACTERISTIC:
1. CONTACT CURRENT RATING:
   1.8 A FOR PIN1&PIN4
   0.25 A OTHER CONTACTS
2. CONTACT RESISTANCE:
   3OmΩ MAX FOR PIN1&PIN4
   5OmΩ MAX FOR OTHER CONTACTS
3. INSULATION RESISTANCE: 100 MΩ MIN.
4. DIELECTRIC WITHSTANDING VOLTAGE: AC 100V(RMS)

ENVIRONMENT:
1. OPERATING TEMPERATURE RANGE: -55°C TO +85°C

PACKING STYLE:
1. TRAY

Chant Sincere Co., Ltd. 21MAY2024 Research & Development Dept.

PIN NUMBER	SIGNAL NAME	PIN NUMBER	SIGNAL NAME
1	VBUS	5	STDB_SSTX-
2	D-	6	STDB_SSTX+
3	D+	7	GND_DRAIN
4	GND	8	STDB_SSRX-
SHELL	SHIELD	9	STDB_SSRX+

ITEM	NEW P/N	OLD P/N	CONTACT PLATING	NOTE
1	53120020010	317AE09FBTS7N7A2	10u" AU/SN	

UNLESS OTHERWISE SPECIFIED TOLERANCE
ANG. ±2.00°
X. ±0.35
.X ±0.25
.XX ±0.25

SIP
ST Cmk Cpk

CHANT SINCERE CO.,LTD

SCALE: AS SHOWN
UNIT: mm

ZONE	REVISION	DESCRIPTION	DATE
	C	ECN-2403088(JOLIN)NEW P/N	25MAR024
	B	ECN-213039(KELVIN)ADD B=10u" AU	18MAR2021
	A	ECN-211079(KELVIN)CHANGE OUTLINE	29JAN2021

DRAWN: XINGRU_LAI 14 May 2024
CHECKED: PEARL_HUNG 14 May 2024
APPROVED: PEARL_HUNG 14 May 2024

TITLE: USB 3.0 BF 90°DIP (H=12.9)

PART NO. 53120020010

SIZE A4 SHEET 1/1 REV. C CODE: X02 CUSTOMER: