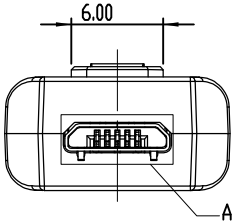

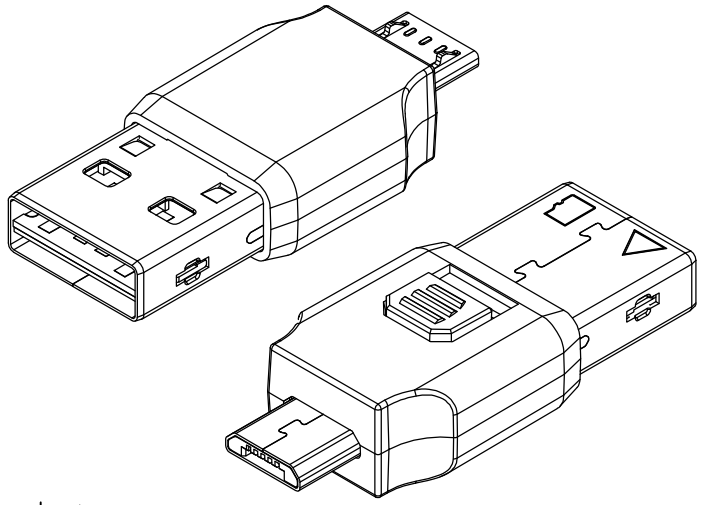

SPECIFICATION
MATERIAL
Insulator: Thermoplastic, rated UL94V-0
Contacts: Copper Alloy
Shell: Steel
CONTACT PLATING
Underplate: 50u"~100u" Nickel
Contact area: Gold Flash
Solder tails area: 100u"~200u" Tin (Lead Free)
ELECTRICAL
Operation voltage: 5.0 V
Current rating: 0.5 Amps max.
Contact resistance: 80 mohms initial
Insulation resistance: 1000 Mohms min @ 500 VDC
Dielectric withstanding voltage: 500 VAC / minute
Temperature range: -40°C TO +85°C

Part no.

G B 01 A B C0 00 A XX
1 2 3 4 5 6 7 8 9

1.SERIES NO.
G=Finished Product
2.TYPE
B=Reader
3.CONN. OPTION:
01=Micro USB 2.0BM/USB 2.0AM(OTG)
4.ID OPTION:
A=TYPE A
5.GREEN OPTION:
B=RoHS2 (Matte)
6.CUSTOMER NO.
C0=COXOC
7.PRINT OPTION:
00=NO Print
8.PACKAGE OPTION:
A=Tray
9.INSULATOR COLOR:
B0=Black
L1=BLUE
G1=GREEN
K1=PURPLE
C1=ORANGE
P1=PINK

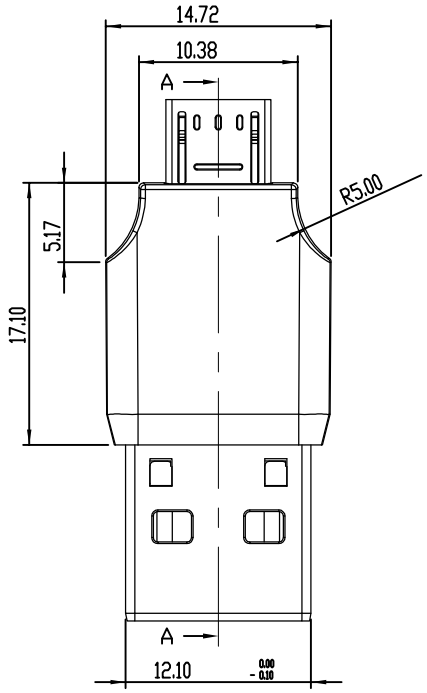

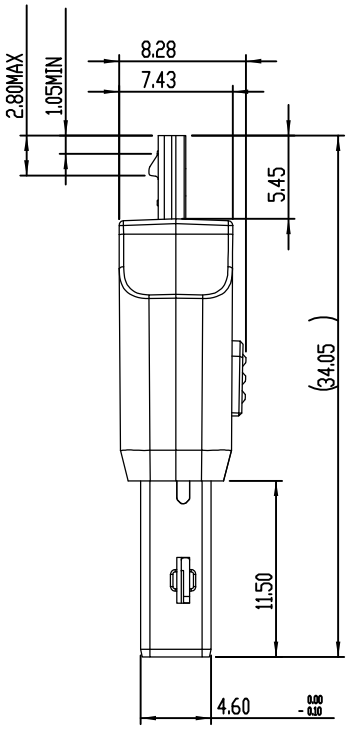

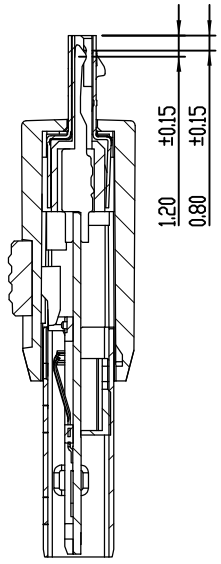

SECTION A-A

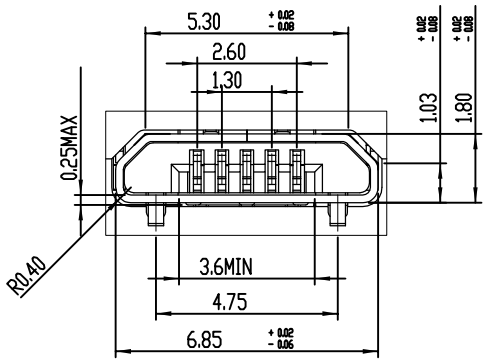

DETAIL A

UNLESS OTHERWISE SPECIFIED TOLERANCE			
ANG.	± 5°		
0.	± 0.50		
.0	± 0.30		
.00	± 0.20		
SCALE: AS SHOWN		UNIT: mm	
DRAWN PEARL		09/25/2013	
CHECKED		/ /	
APPROVED		/ /	
SIZE A4	REV. B		

COXOC
CHANT SINCERE CO.,LTD
TEL:886-02-86471251 FAX:886-02-86472962

DRAWN NANE: Long Stay OTG Reader (PDR-13075)
PRODUCT NO. GB01ABC000AXX
FILE NAME: C-GB01ABC000AXX(GB)

REV.	DESCRIPTION	DATE