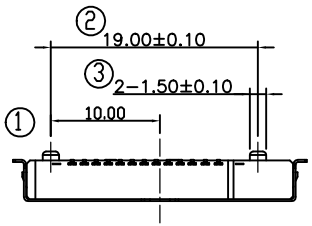

DATE CODE:

YEAR — YY
EX.15=2015
WEEK CODE — WW

SPECIFICATION
MATERIAL
Insulator: LCP
Contacts: YCUT-FX-EH/C17200
Shell: SUS304 1/2H
Lock Pin: SUS304 3/4H
Spring: SWP-B
Cam Rod: SUS304H
CONTACT PLATING
Underplate: 50u"~120u" Nickel
Contact area: 15u" Selective gold
Solder tails area: 80u"~200u" Tin (Lead Free)
ELECTRICAL
Rated Voltage: 500Vrms AC for 1min
Current rating: 1.0 A.Min. for Signal pin
3.0 A.Min .for Power pin
Contact resistance: Initial: 55m Ω max. Final:△40m Ω max.
Insulation resistance: 1000M Ω Min. at 500VDC for 1ms.
Dielectric withstanding voltage: 500 VAC / minute
Temperature range: -25°C TO +85°C
Mating cycles: 12,000 insertions

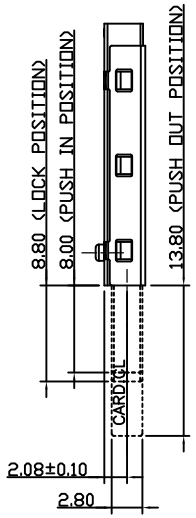

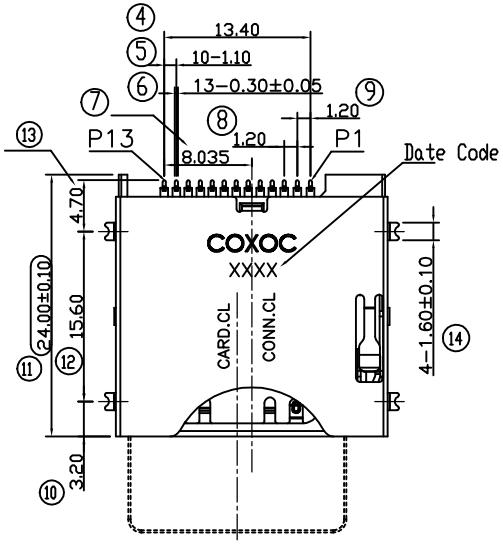

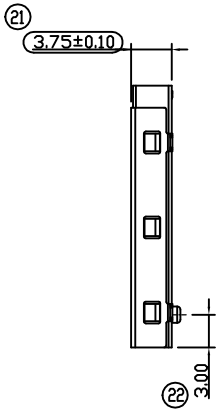

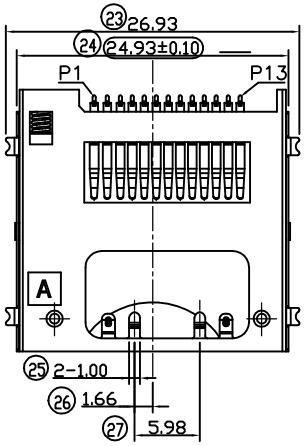

Part no. 752 D H 13 B C T F3 J X C C
1 2 3 4 5 6 7 8 9 10 11 12

1.Series no.
752=CF Form-Factor Connector
2.D=SMT Type
3.Green option
H=RoHS+HF (Matte)
4.Contact number:
13=13 pin
5.Contact type:
B=Female(LCP)
6.Contact area plating:
C=15u" Gold
7.Solder tails area plating
T=50u"~150u" Tin(Matte)
8.Apply type:
F3=A type
9.Shell plating
J=30u" Nickel
(Solder tails Gold Flash)
10.1=W/O. Shell Ground
2=W/Shell Ground
11.Packing style
C=Tape reel
12.Insulator color
C=Black+Date Code

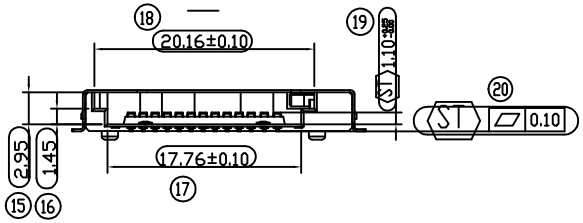

For SIP
For CmK/Cpk

UNLESS OTHERWISE SPECIFIED TOLERANCE
ANG. ±5°
0. ±0.3
.0 ±0.3
.00 ±0.2

CHANT SINCERE CO.,LTD
TEL:886-02-86471251 FAX:886-02-86472962

SCALE: AS SHOWN	UNIT: mm		
DRAWN Andy_Gau	2019/03/28	DRAWN NAME: CFexpress TypeA Connector 1/2	
CHECKED	/ /		
APPROVED	/ /	PRODUCT NO. 752DH13BCTF3JXCC	
SIZE A4	REV. X2	FILE NAME: C-752DH13BCTF3JXCC	

REV.	DESCRIPTION	DATE

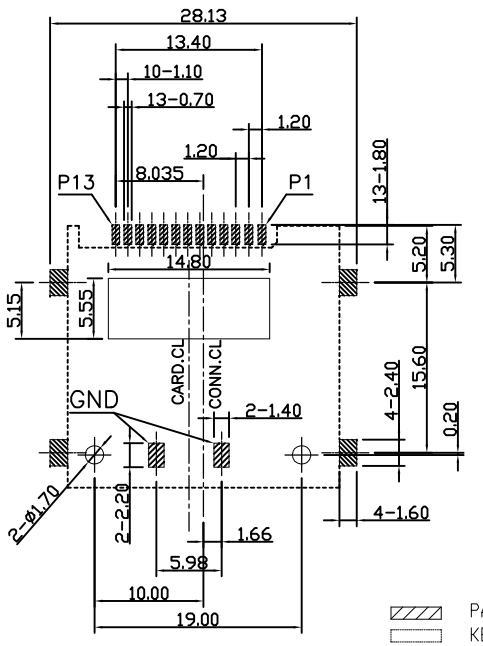

RECOMMENDED P.C.B LAYOUT

TOLERANCE IS: ±0.05

P/N	752DH13BCTF3J1CC (W/O Shell Ground)	752DH13BCTF3J2CC (W/Shell Ground)
DRAWING	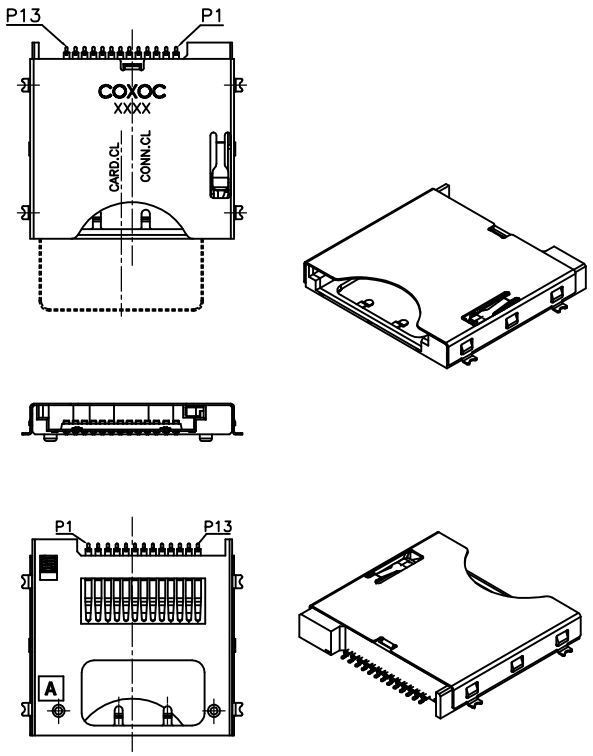	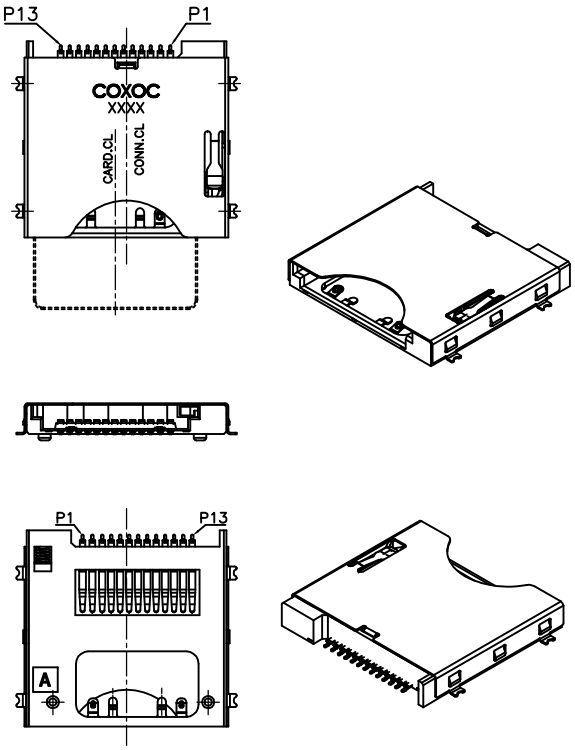

PIN DESIGN		
13	GND	Ground
12	PETp0	PCIe Gen3 Tx singal
11	PETn0	PCIe Gen3 Tx singal
10	GND	Ground
9	PERp0	PCIe Gen3 Rx singal
8	PERn0	PCIe Gen3 Rx singal
7	GND	Ground
6	REFCLK+	Reference Clock input
5	REFCLK-	Reference Clock input
4	INS#	Media detection and power control
3	CLKREQ#	Indication of REFCLK to Host
2	+3.3V	3.3V Power Supply
1	PERST#	PCIe Express function reset

REV.	DESCRIPTION	DATE

UNLESS OTHERWISE SPECIFIED TOLERANCE
ANG. ±5°
0. ±0.3
.0 ±0.3
.00 ±0.2

SCALE: AS SHOWN	UNIT: mm	CHANT SINCERE CO.,LTD TEL:886-02-86471251 FAX:886-02-86472962	
DRAWN Andy_Gau	2019/03/28	DRAWN NAME: CFexpress TypeA Connector 2/2	
CHECKED	/ /		
APPROVED	/ /	PRODUCT NO. 752DH13BCTF3JXCC	
SIZE A4	REV. X2	FILE NAME: C-752DH13BCTF3JXCC	