NOTES:
1.MATERIAL:
01 SFP TOP CAGE : COPPER ALLOY
02 SFP BOTTOM CAGE : COPPER ALLOY
2. FINISH
SFP TOP CAGE : NI-PLATED OVER ALL
SFP BOTTOM CAGE : NI-PLATED OVER ALL
3. TEMPERATURE:
OPERATION : -40°C TO +85°C
STORAGE : -55°C TO +105°C

4.PACKAGING: TAPE & REEL

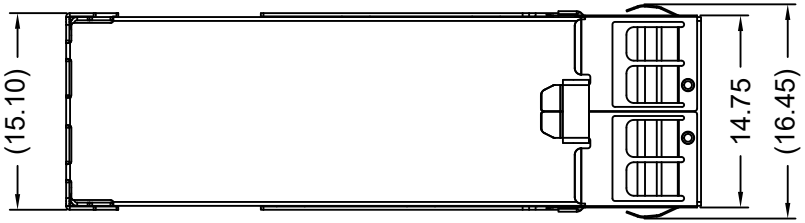

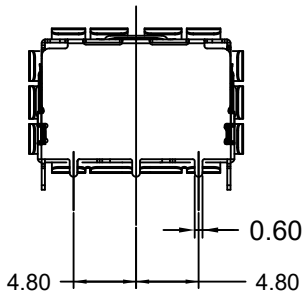

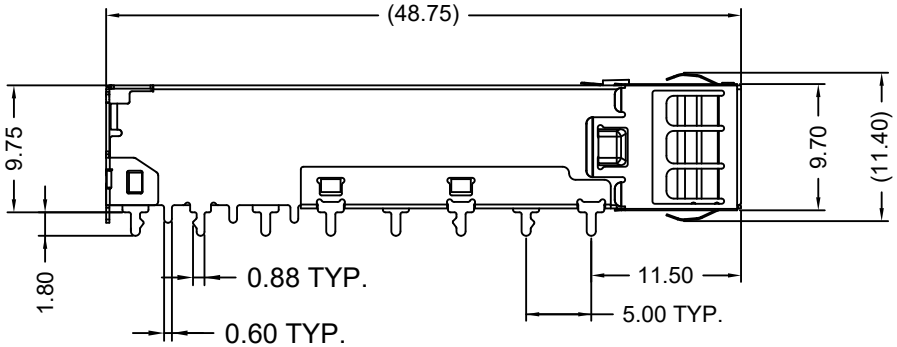

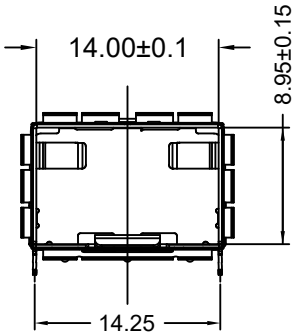

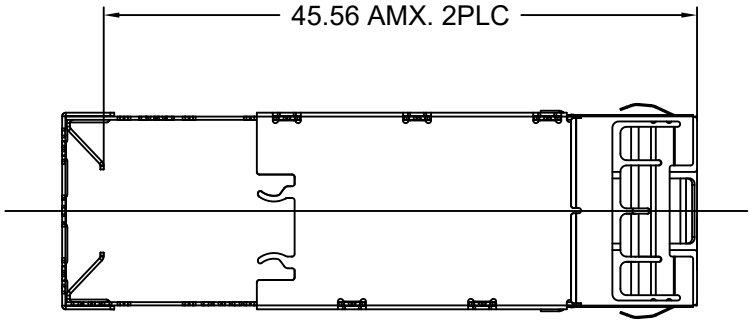

PART NUMBER:

902 A E 11 S L 0 C2 X 0 A 0
1 2 3 4 5 6 7 8 9 10 11 12

1.SERIES NO.
2.TYPE: A=DIP
3.GREEN OPTION:
E=RoHS
4.PORT NO:
11=1x1(DIP L=1.8mm)
5.CONTACT TYPE:
S=SILVER COPPER
6.TYPE:
L=WITHOUT TOP HOLES
7.LIGHT PIPES TYPE:
0=W/O Light Pipe
8.TYPE OPTION:
C2=SFP+ Cage
9.SHELL PLATING/TYPE:
0=Non Plating/Spring
N=Ni Plating/Spring
10.PROCESS OPTION:
0=W/O Light Pipe
11.PACKAGE OPTION:
C=Tape & Reel
12.INSULATOR COLOR:
0=Non Function

UNLESS OTHERWISE SPECIFIED TOLERANCE
.X 1°
.0 0.20
.00 0.15
.000 0.10

CHANT SINCERE CO.,LTD
TEL:886-02-86471251 FAX:886-02-86472962

SCALE: AS SHOWN	UNIT: mm		
DRAWN: PEARL	11/09/2018	DRAWN NAME: SFP+ CAGE .1X1 DIP WITH EMI SPRINGS 1/4	
CHECKED:			
APPROVED:		PRODUCT NO. 902AE11SL0C2X0C0	
SIZE A4	REV. X1	FILE NAME: 902AE11SL0C200C0(X07)	

REV.	DESCRIPTION	DATE

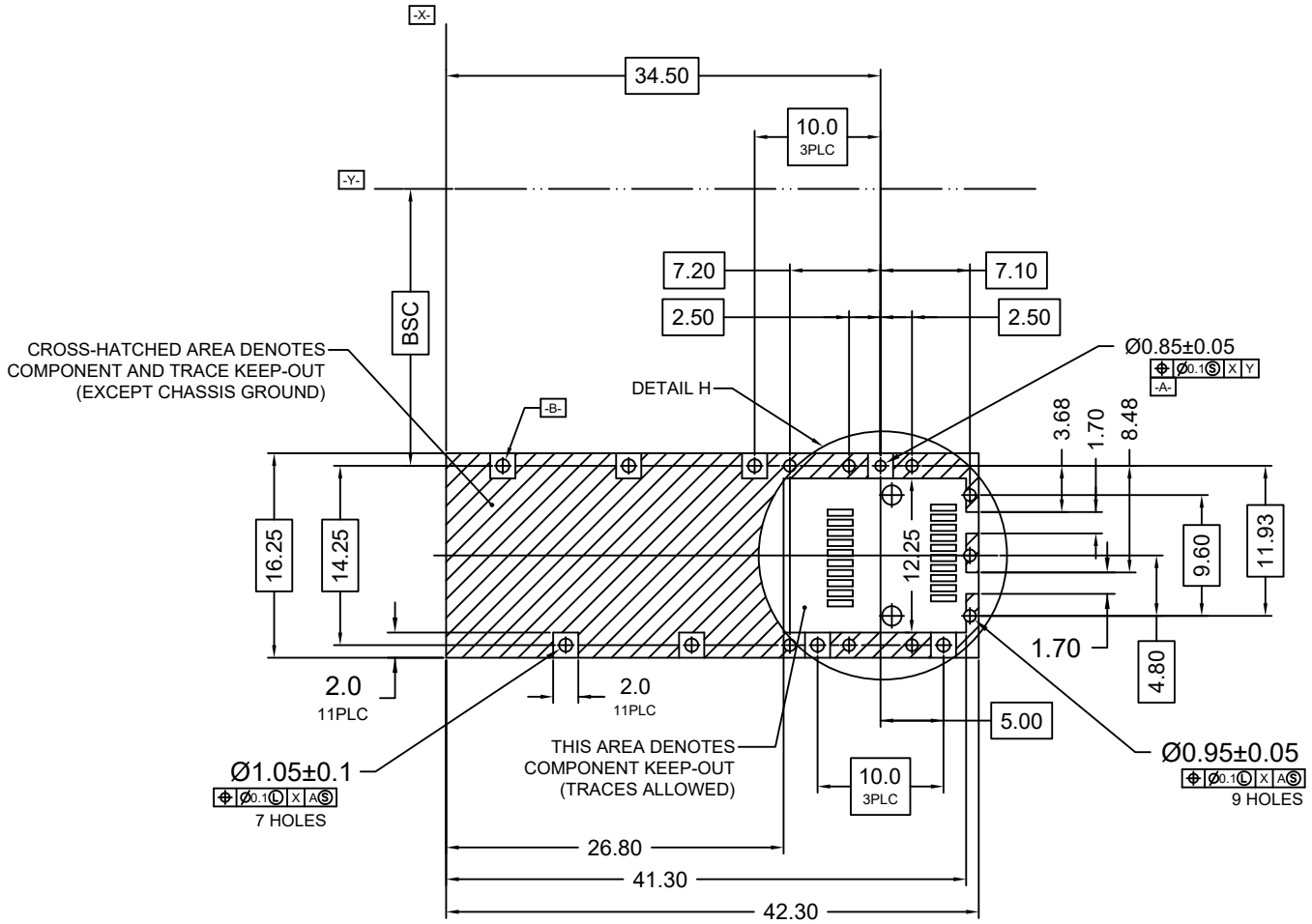

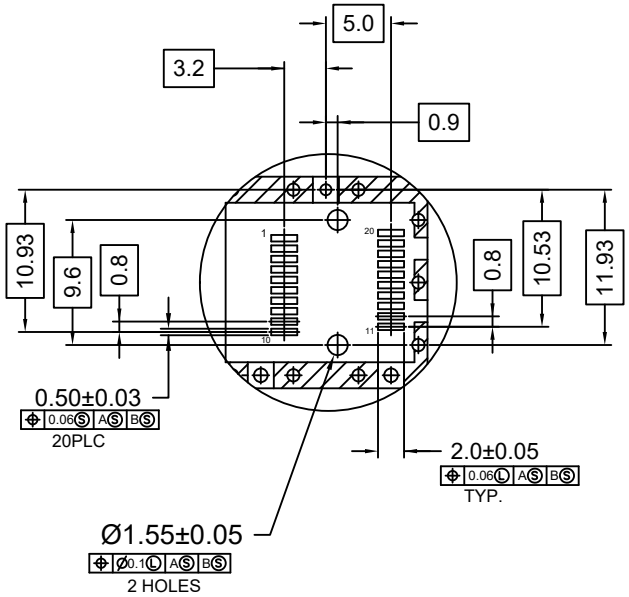

ECOMMENDED PCB CONFIGURATION

UNLESS OTHERWISE
SPECIFIED TOLERANCE
.X 1°
.0 0.20
.00 0.15
.000 0.10

CHANT SINCERE CO.,LTD
TEL:886-02-86471251 FAX:886-02-86472962

SCALE: AS SHOWN	UNIT: mm		
DRAWN: PEARL	11/09/2018	DRAWN NAME: SFP+ CAGE .1X1 DIP WITH EMI SPRINGS 2/4	
CHECKED:			
APPROVED:		PRODUCT NO. 902AE11SL0C2X0C0	
SIZE A4	REV. X1	FILE NAME: 902AE11SL0C200C0(X07)	

REV.	DESCRIPTION	DATE

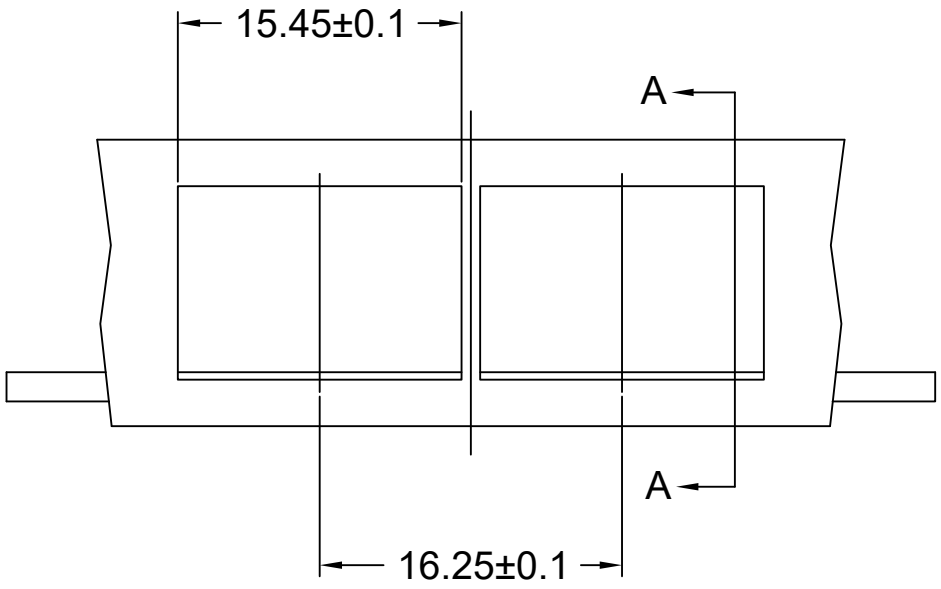

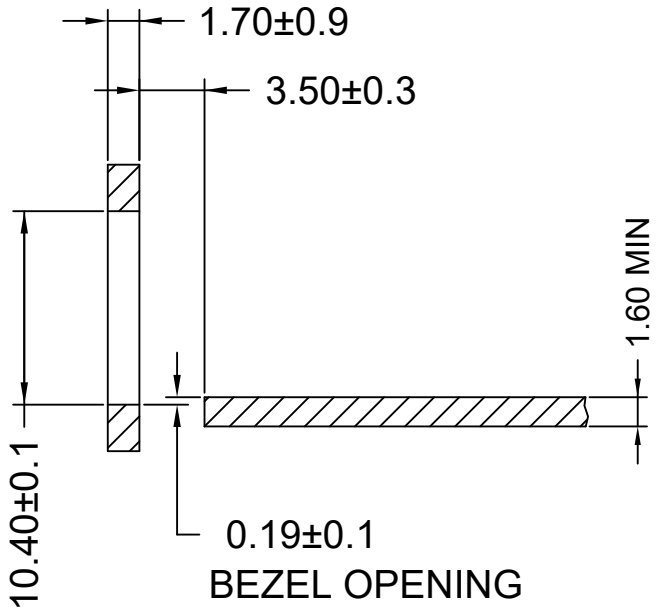

SECTION A-A

RECOMMENDED BEZEL DESIGN

UNLESS OTHERWISE
SPECIFIED TOLERANCE
.X 1°
.0 0.20
.00 0.15
.000 0.10

SCALE: AS SHOWN	UNIT: mm	CHANT SINCERE CO.,LTD	
DRAWN: PEARL	11/09/2018	DRAWN NAME: SFP+ CAGE .1X1 DIP WITH EMI SPRINGS 3/4	
CHECKED:			
APPROVED:		PRODUCT NO. 902AE11SL0C2X0C0	
SIZE A4	REV. X1	FILE NAME: 902AE11SL0C200C0(X07)	

TEL:886-02-86471251 FAX:886-02-86472962

REV.	DESCRIPTION	DATE

PACKAGE INFORMATION AND LABLE

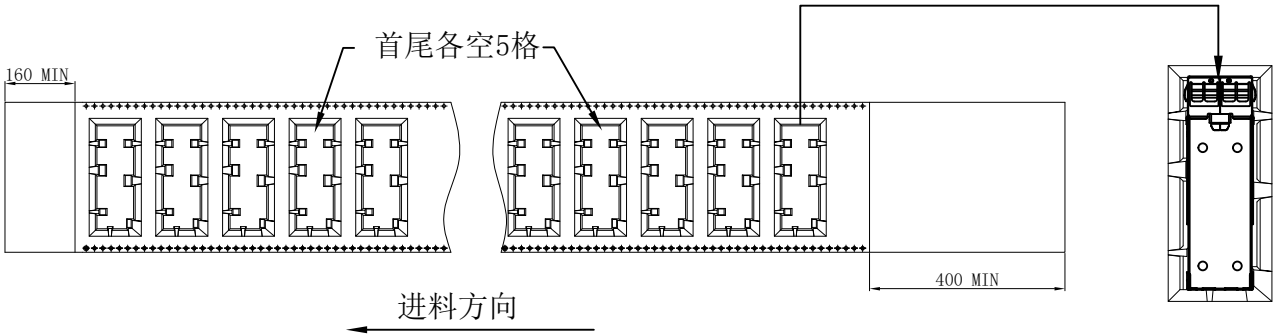

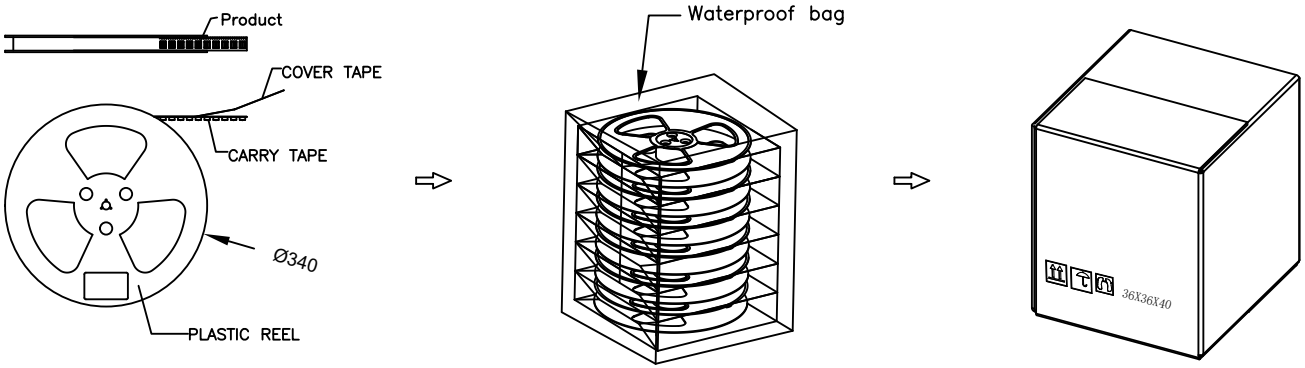

PACKING QUANTITY : 150 PCS FINISHED GOODS PER REEL.
5 REEL (750 PCS FINISHED GOODS) PER CARTON BOX.

UNLESS OTHERWISE SPECIFIED TOLERANCE
.X 1°
.0 0.20
.00 0.15
.000 0.10

SCALE: AS SHOWN	UNIT: mm	CHANT SINCERE CO.,LTD TEL:886-02-86471251 FAX:886-02-86472962	
DRAWN: PEARL	11/09/2018	DRAWN NANE: SFP+ CAGE .1X1 DIP WITH EMI SPRINGS 4/4	
CHECKED:			
APPROVED:		PRODUCT NO. 902AE11SL0C2X0C0	
SIZE A4	REV. X1	FILE NAME: 902AE11SL0C200C0(X07)	

REV.	DESCRIPTION	DATE