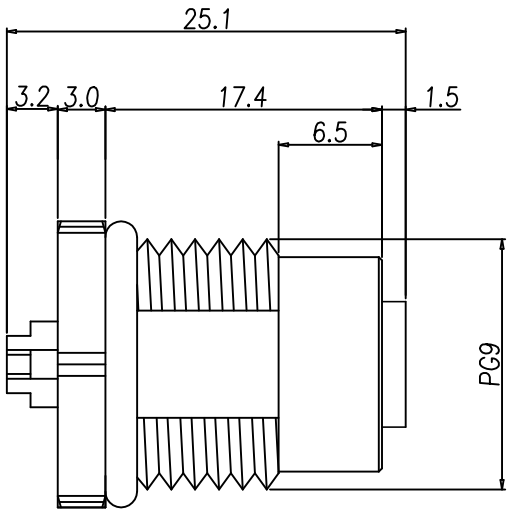

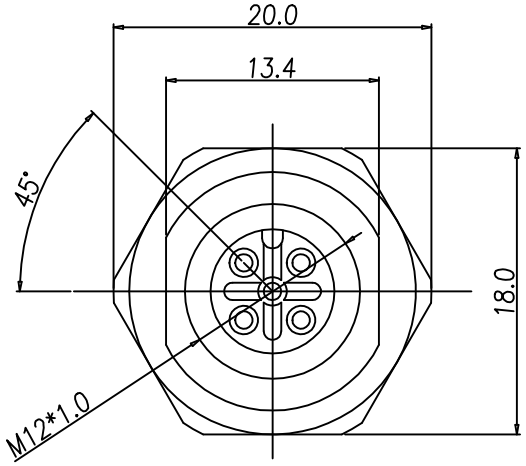

1. MATERIAL :
   1-1. HOUSING : PBT UL94V-0 ; COLOR : BLACK
   1-2. CONTACT : BRASS
   1-3. NUT : BRASS
   1-4. SHELL : BRASS
   1-5. O-RING : EPDM
2. FINISH :
   2-1. CONTACT : 10 MICRO INCHES MIN. GOLD PLATED
        UNDER PLATE : NICKEL
   2-2. NUT : NICKEL PLATED
   2-3. SHELL : NICKEL PLATED
3. ELECTRICAL SPECIFICATION :
   3-1. Rated current : 5A
   3-2. Rated Voltage :125V
   3-3. Water proof: IPX7
4. Environmental :
   4-1. Operation Temperature : -40℃~85℃

Part no.

649 A E XX F B B D4 N E X 3
1 2 3 4 5 6 7 8 9 10 11 12

1.SERIES NO.
649=Water Proof CONN.
2.A=Standard Type
3.GREEN OPTION:
E=RoHS(Bright Plated)
4.CONTACT NUMBER:
02=2 PINS.~05=05 PINS.
5.CONTACT TYPE:
F=FEMALE
6.CONTACT AREA PLATING:
B=10u" GOLD
7.SOLDER TAILS AREA PLATING:
B=10u" GOLD
8.APPLY TYPE:
D4=Panel Mount PG9
9.SHELL PLATING:
N=Nickel
10.TYPE:
E=X-Code
11.PACKING STYLE:
A=TRAY
D=BAG
12.INSULATOR COLOR:
3=Black

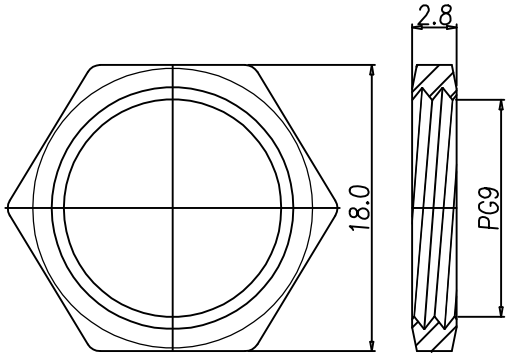

NUT

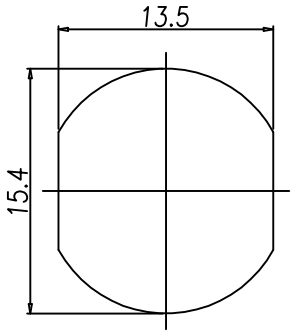

RECOMMENDPANEL CUT-OUT

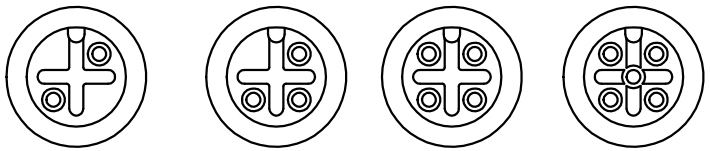

UNLESS OTHERWISE SPECIFIED TOLERANCE ANGULA ±1° .x ±0.20 .xx ±0.10 .xxx ±0.05			CHANT SINCERE CO.,LTD TEL:886-02-86471251 FAX:886-02-86472962
SCALE: AS SHOWN	UNIT: mm		
DRAWN PEARL	06/28/2017		DRAWN NANE: M12 Panel Mount Female Conn.
CHECKED			
APPROVED			PRODUCT NO. 649AEXXFBBD4NEX3
SIZE A4	REV. X1		FILE NAME: 649AEXXFBBD4NEX3(Z06)

REV.	DESCRIPTION	DATE