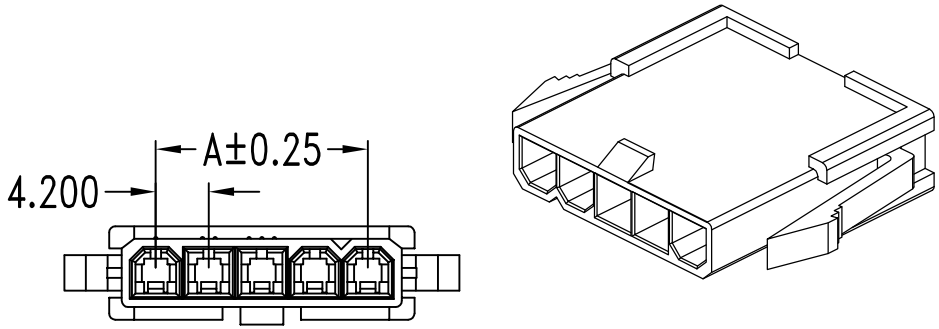

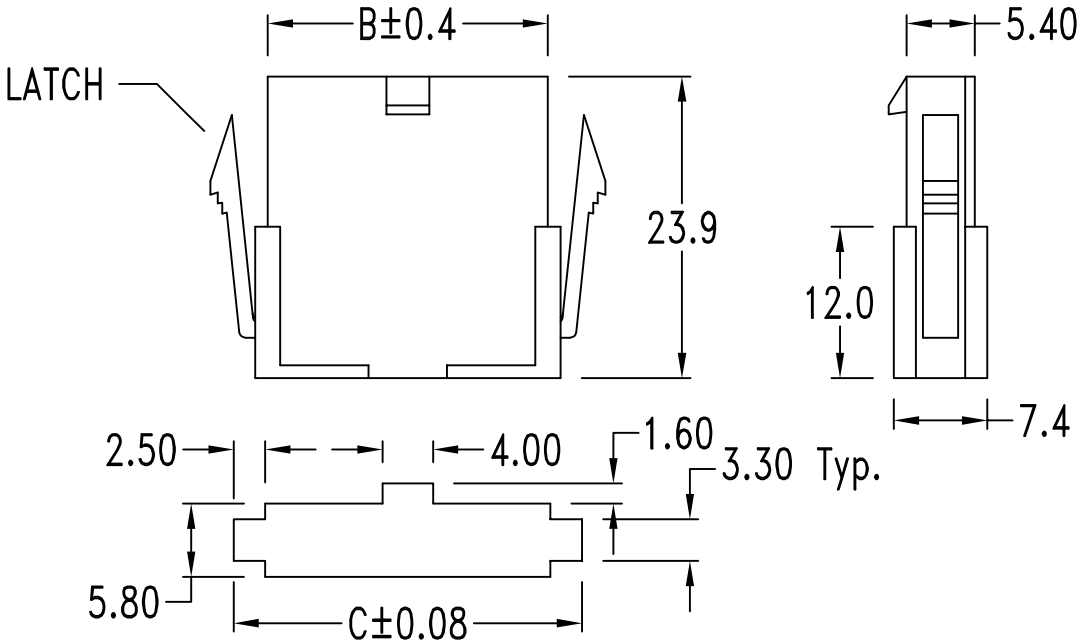

PANEL CUTOUT [Max. panel thickness: .079"(2.0mm)]

Features:

- Material UL 94V-0
- Accepts 313A(D101~03)Male terminal
- Mates with 312A(D101)Male housing

Specification:

- Current rating and wire size:

Wire Size AWG	POSITION 2, 3	4 ~ 6	7 ~ 10	11, 12
# 16	9 A	8 A	7 A	6 A
# 18	9 A	8 A	7 A	6 A
# 20	7 A	6 A	5 A	5 A
# 22	5 A	4 A	4 A	4 A
# 24	4 A	3 A	3 A	3 A
# 26	3 A	2 A	2 A	2 A
# 28	2 A	1 A	1 A	1 A

- Voltage rating: 600V (R.M.S.)
- Insulation resistance: DC 500V 1000MΩ min.
- Dielectric withstanding voltage: 1500V AC/minute
- Ambient temperature range: −40°C ~ 105°C (including temperature rise)

PART NO.

312 A E XX F A 0 D1 0 2 D 9
1 2 3 4 5 6 7 8 9 10 11 12

1.SERIES NO.
2.TYPE A=Standard
3.GREEN OPTION
E=RoHS
4.CONTACT NO.
02~12
5.CONTACT TYPE
F=Female
6.ROW TYPE
A=Single Row
7.FILL IT WITH "0"
8.PITCH OPTION
D1=4.2mm
9.FILL IT WITH "0"
10.PROCESS OPTION
2=TYPE 1(W/Latch)
11.PACKAGE OPTION
D=Bag
12.INSULATOR COLOR
9=Transparency

Dimensional Information (mm)

POSITION	Dim. A	Dim. B	Dim. C
2~12	4.2 x (N − 1)	4.2 x N + 1.2	4.2 x N + 6.6

UNLESS OTHERWISE SPECIFIED TOLERANCE
.0 ±0.40
.00 ±0.25
.000 ±0.08

SCALE: AS SHOWN | UNIT: mm

DRAWN PEARL 10/04/13
CHECKED / /
APPROVED / /

CHANT SINCERE CO.,LTD
TEL:886-02-86471251 FAX:886-02-86472962

DRAWN NAME: Wafer Housing Pitch 4.2mm
PRODUCT NO. 312AEXXFA0D102D9
FILE NAME: 312AEXXFA0D102D9(W3)

SIZE A4 REV. X1

REV.	DESCRIPTION	DATE