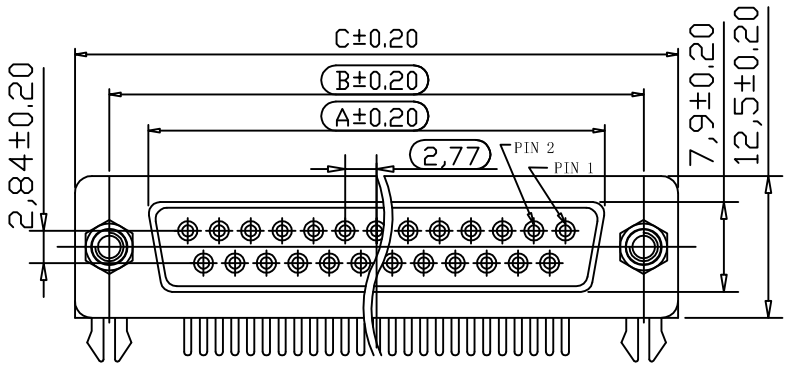

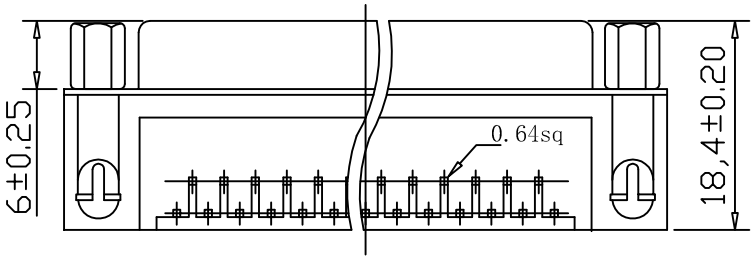

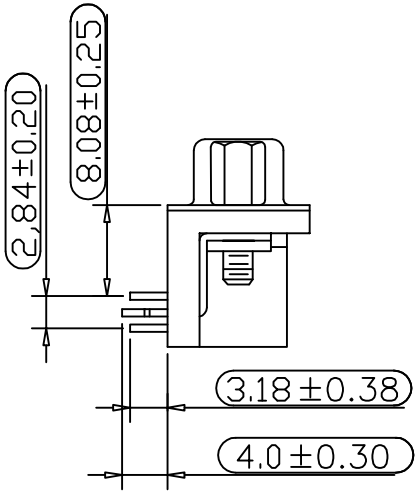

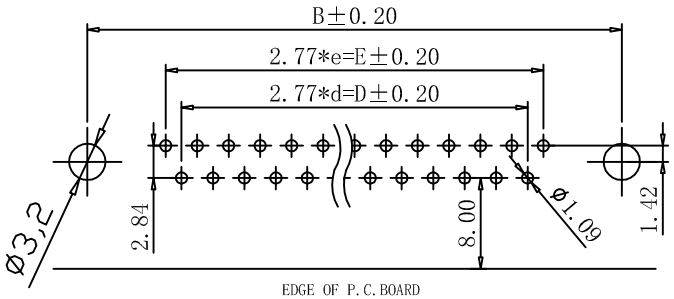

EDGE OF P.C.BOARD
RECOMMENDED P.C.B LAYOUT (TOP VIEW)
TOLERANCES: ±0.05mm

POSITION	A	B	C	d	D	e	E
09	16.33	25.00	30.8	03	08.31	04	11.08
15	24.80	33.30	39.2	06	16.62	07	19.39
25	38.33	47.10	53.2	11	30.47	12	33.24
37	54.89	63.50	69.4	17	47.09	18	49.86

PARTS DIMENSION TABLE

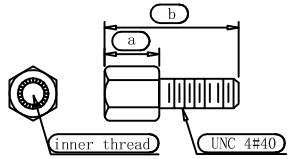

parts no.	DIM. a	DIM. b	inner thread
C	4.8	11.8	4#40
E	5.8	12.0	4#40
G	4.8	11.8	M3
H	6.0	13.2	M2.6
I	5.8	11.8	M3
X	4.8	11.8	M2.6
Z	5.8	12.0	M2.6
7	6.0	12.0	4#40
9	6.1	12.0	4#40

MATERIAL:
INSULATOR:Thermal PlasticUL94V-0
CONTACT:Copper Alloy
CONTACPLATED:GOLD OVER NICKEL OR TIN
SHELL:STEEL,NICKEL OR TIN
SPESIFICATION:
CURRENT RATE:5 AMPS
INSULATOR RESISTANCE:1000M MIN.AT 500V DC
DIELLECTRIC STRENGTH:1000V PER
OPERTION TEMPERATURE:-55C TO+105C
IMPEDANCE:16M FOR 25MHz

PART NO.

205 A X XX X X X X B X 3
1 2 3 4 5 6 7 8 910 11

1. SERIES NO.
2. TYPE: A=Standard
3. GREEN OPTION :
   E=RoHS (Bright)
4. CONTACT NUMBER:
   09 15 23 25 37
5. CONTACT TYPE:
   F=Female(PBT)
6. CONTACT AREA PLATING:
   G=Gold Flash
   S=Gold Flash (Selective)
7. SHELL PLATING:
   T=Tin Plated
8. PROCESS OPTION:
   B=Rivet W/Boardlock
9. PARTS OPTION:
   B=4#40 Thread Rivet
10. PARTS DIMENSION
   C=Fixed HEX-screws(4.8*11.8)
   E=Fixed HEX-screws(5.8*12)
11. INSULATOR:
   3=Black

For SIP
ST For cmk/cpk

UNLESS OTHERWISE SPECIFIED TOLERANCE
ANG. ±5°
0. ±0.5
.0 ±0.3
.00 ±0.25

CHANT SINCERE CO.,LTD
TEL:886-02-86471251 FAX:886-02-86472962

SCALE: AS SHOWN	UNIT: mm	DRAWN NAME: D-SUB PCB RIGHT ANGLE	
DRAWN PEARL	08/21/14		
CHECKED	/ /		
APPROVED	/ /	PRODUCT NO. 205AXXXFXXBBX3	
SIZE A4	REV. B	FILE NAME: 205AGXXFXXBBC3(H03)	

REV.	DESCRIPTION	DATE